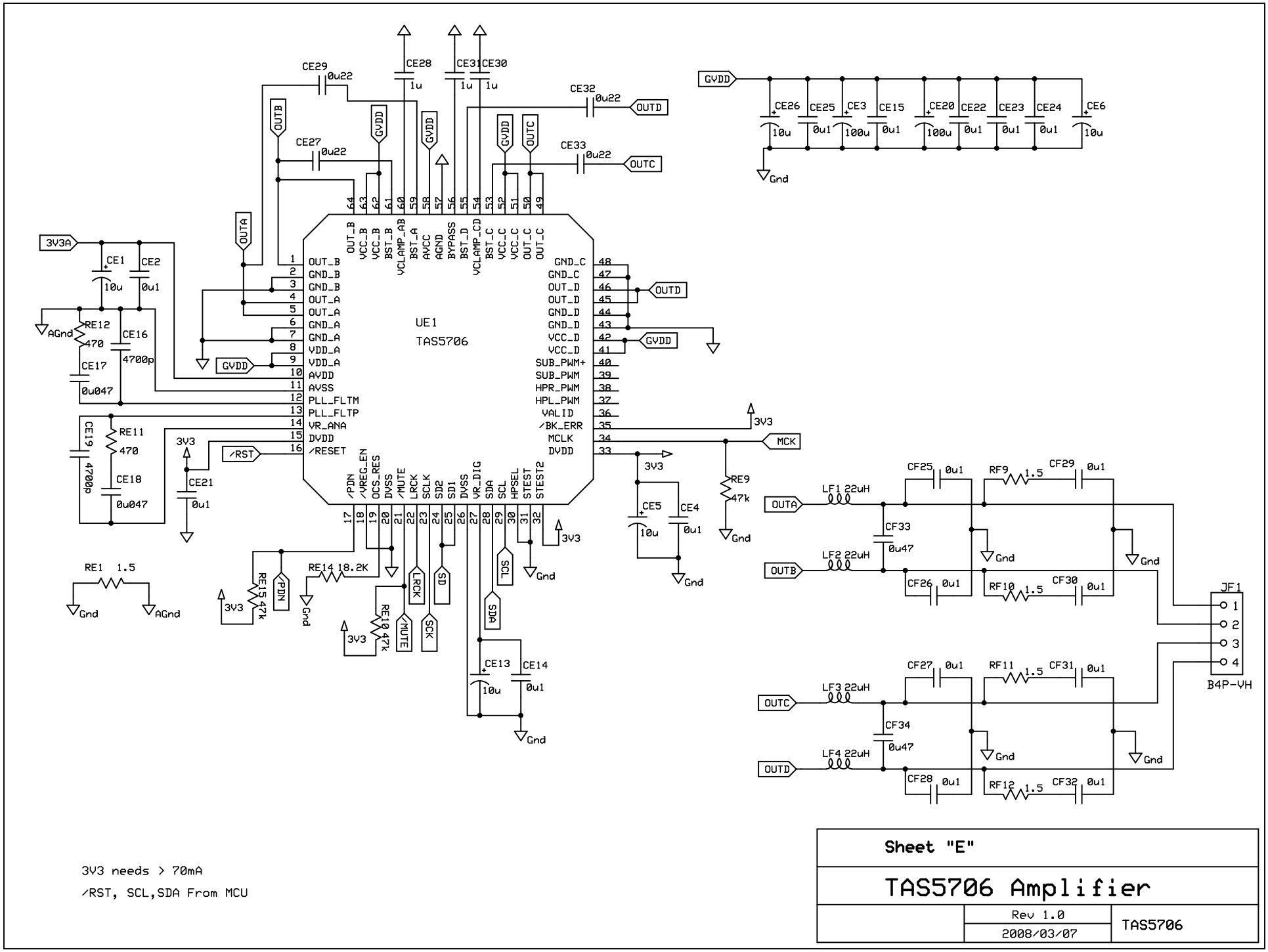

3V3 needs > 70mA

/RST, SCL,SDA From MCU

Sheet "E"		
TAS5706 Amplifier		
	Rev 1.0	TAS5706
	2008/03/07	